LEX LOCALIS-JOURNAL OF LOCAL SELF-GOVERNMENT
ISSN:1581-5374 E-ISSN:1855-363X
VOL. 23, NO. 9(2025)

THE IMPACT OF SOCIAL MEDIA ON BUILDING AND ENHANCING THE CORPORATE IMAGE: A STUDY OF A SAMPLE OF RUE D'OR HOTEL ALGERIA CUSTOMERS

Maaoui Abdeladhim[1]

[1]University of Setif 1, Laboratory of Marketing and Economic Studies and Research (Algeria).
ORCID:https://orcid.org/0009-0007-1776-978X

abdeladhim.maaoui@univ-setif.dz[1]

Corresponding author email: abdeladhim.maaoui@univ-setif.dz[1]

Received: 16/01/2025 Accepted1:7/07/2025 Published: 27/09/2025

Abstract:

This study investigates the influence of social media on cultivating and enhancing corporate image by examining the relevant concepts and variables. It delineates the dimensions of corporate image, categorized into cognitive, emotional, behavioural, and social dimensions. Moreover, the research underscores the direct role of social media in shaping corporate image and delineates methodologies through which this image may be managed, as evidenced by the findings of a field study.

To fulfill the research objectives, a questionnaire was administered to customers of the Rue D'or Hotel, encompassing a sample of 100 individuals. In its practical application, the study employed SPSS25 software for executing descriptive statistics and hypothesis testing.

Keywords: Social media, corporate image, social media marketing.

1. Introduction:

The mid-1990s witnessed pivotal technological advancements that revolutionized communication, rapidly expanding the internet's reach and transforming the world into a closely connected information nexus. This global interconnectivity enabled the instantaneous dissemination of information to every corner of the planet. Such advancements have significantly impacted both individuals and organizations, prompting widespread adoption of these technologies to capitalize on their diverse benefits.

Today, social media platforms are among the most prevalent online environments, favored for their user-friendliness and rapid access to information. These platforms are instrumental in e-marketing and have become essential tools for organizations aiming to engage effectively with their target audiences. The engagement of these audiences is critical to the organizations' success, influencing their reputation and potentially determining their viability based on consumer demand for their products.

The role of social media has evolved from merely a medium for product information dissemination, as was common with early corporate websites, to a dynamic forum for interaction between institutions and their stakeholders. Social media significantly impacts by providing a direct channel for the public to interact with corporations, critique their marketing efforts, and openly provide feedback without intermediaries. This interaction not only strengthens the relationships between corporations and their clientele but also enhances customer loyalty to the organizations' offerings.

From the above, the following research problem can be raised:

Research Problem:
What is the impact of using social media on building and enhancing the corporate image?
This main question is accompanied by the following sub-questions:
Sub-questions:
- What is the impact of social media on building and enhancing the cognitive dimension of the institution?
- What is the impact of social media on building and enhancing the emotional dimension of the institution?
- What is the impact of social media on building and enhancing the behavioral dimension of the institution?
- What is the impact of social media on building and enhancing the social dimension of the institution?

Research Hypotheses:
To explore these questions, a series of hypotheses have been developed, which are subject to verification or refutation:
Main Hypothesis H1: Social media has a positive impact on building and enhancing the corporate image at a significance level of (0.05≥α).
Under this overarching hypothesis, the following specific sub-hypotheses are proposed:
- **H1.1:**Social media has a positive impact on building and enhancing the cognitive dimension of the institution at a significance level of (0.05≥α);
- **H1.2:**Social media has a positive impact on building and enhancing the emotional dimension of the institution at a significance level of (0.05≥α);
- **H1.3:**Social media has a positive impact on building and enhancing the behavioral dimension of the institution at a significance level of (0.05≥α);
- **H1.4:**Social media has a positive impact on building and enhancing the social dimension of the institution at a significance level of (0.05≥α).

Study Model:

Figure 01: Study ModelThe Mental Image of the Organization

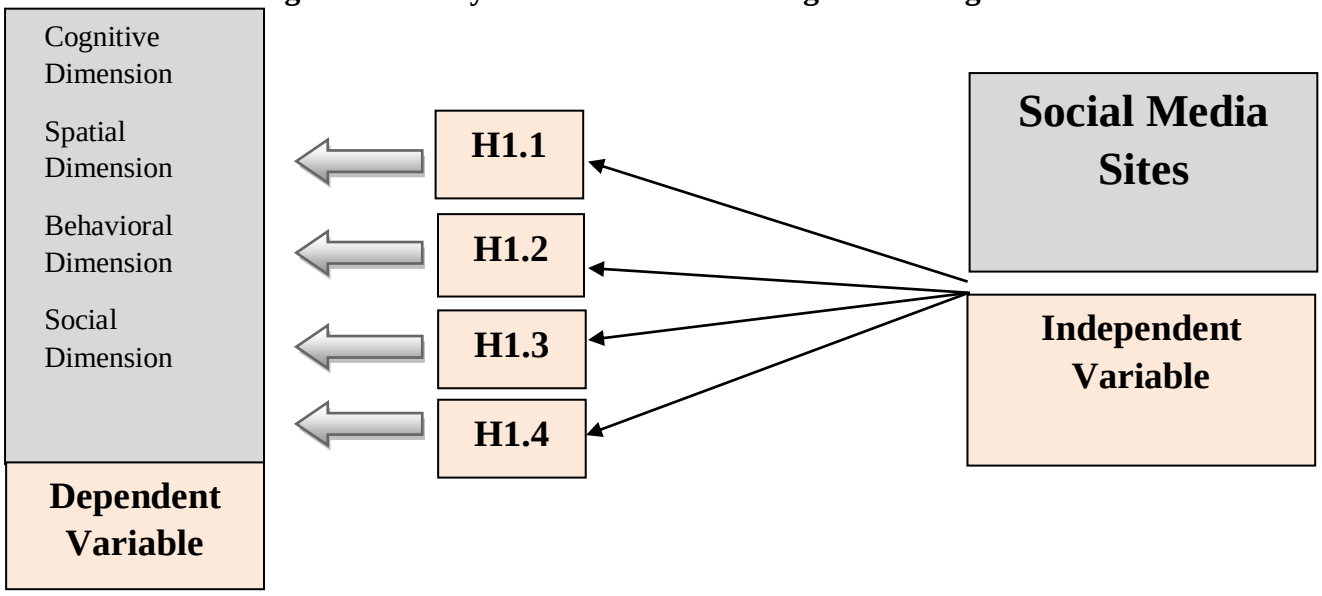

Source: Prepared by the researcher

Previous Studies

- **Study (Daoudi Widad, 2021):** PhD Thesis titled "*Marketing the Corporate Image of Service Organizations via Facebook Pages: A Field Analytical Study of Ooredoo Telecom."* This research aimed to uncover the strategies employed by service organizations to market their corporate image through Facebook. The study acknowledges the pivotal role of corporate image as an invaluable asset for institutions. With Facebook's dominance as the foremost social network in Algeria, its transformation from a personal to an institutional and marketing tool is significant. This platform offers institutions the capability to engage with diverse audiences, thereby nurturing positive relationships and enabling the projection of a positive organizational image.

Key findings from the study included:

- The "Algérie Ooredoo" Facebook page emphasizes the importance of page design and leverages the organization's visual identity to influence followers' perceptions via profile pictures and other interactive features on Facebook, such as the "Like" button and engagement options.
- A considerable number of participants use the organization's website as a supplementary communication tool to the Facebook page. However, the moderate dependence on the website has slightly undermined their attachment to the institution, with some expressing a readiness to switch to competitors if better opportunities arise.
- Views on the effectiveness of the "Algérie Ooredoo" Facebook page in marketing the corporate image were mixed. Proponents cited the increased engagement due to Facebook's popularity, using the page as a key resource for updates on offers and services. Conversely, critics argued that effective marketing of the corporate image extends beyond digital platforms and should also focus on improving service quality and internet connectivity.

- **Study (Imad Hussein Saud Al-Husseini, 2019):** Article titled "Developing Hotel Services and Their Impact on Enhancing the Guest's Corporate Image: A Field Study of a Sample of Managers of Premium Hotel Organizations in Baghdad." This research aimed to explore the policies and strategies employed by leadership in premium hotel organizations in Baghdad to advance hotel services and elevate the corporate image of their guests.

The findings of the study highlighted the following:

- There exists a significant correlation between the enhancement of hotel services and its impact on the corporate image perceived by guests in the investigated hotel organizations. The development of hotel services is increasingly seen as crucial, positively influencing the guest's perception of the corporate image. This enhancement is achieved by effectively implementing hotel service development strategies and adhering to the established principles and philosophies underlying the corporate image strategies of guests. These strategies are designed to encapsulate and promote the message of the hotel organizations within the broader marketing context.

The main recommendations included:

- Hotel management is encouraged to meticulously consider both external and internal factors influencing hotel services. This includes a strong emphasis on the quality and timely delivery of services to ensure customer satisfaction and enhance the corporate image.
- Additionally, it is recommended that hotel management consistently adhere to the principles and philosophies of the guest's corporate image strategy. A particular focus should be placed on strengthening the brand identity of the hotel organization, which is pivotal in shaping guests' perceptions and enhancing the overall corporate image.

- **Study (Imad Hussein Saud Al-Husseini, 2019):** Article titled "Developing Hotel Services and Their Impact on Enhancing the Guest's Corporate Image: A Field Study of a Sample of Managers of Premium Hotel Organizations in Baghdad." This study aimed to identify the policies and strategies adopted by leaders of hotel service organizations in Baghdad to develop hotel services and enhance the corporate image of the guest.

  The study concluded:

  _ There is a correlation between the development of hotel services and their impact on enhancing the corporate image of the guest in the studied hotel organizations. The importance of developing hotel services increases and has a positive effect on enhancing the guest's corporate image by activating the role of the hotel service development strategy and adhering to the principles and philosophies of the corporate image strategy for the guest, aiming to embody the message of hotel organizations within the marketing environment.

  The main recommendations included:

  _ Hotel management was advised to pay attention to both external and internal factors of hotel services, with a focus on ensuring the quality of the services provided and the timely delivery of services.

  _ Hotel management was also advised to adhere to the principles and philosophies of the guest's corporate image strategy, particularly by focusing on the hotel organization's brand.

- **Study (Mohammed Awad Jarrallah Al-Shammari, 2017):** Master's Thesis titled "Digital Marketing and Its Role in Enhancing the Corporate Image of the Organization: An Exploratory Study of the Views of Employees at Asiacell Telecommunications Company, Karbala Branch, Iraq." This study aimed to understand the nature of the relationship between digital marketing and the corporate image of the organization, and how digital marketing contributes to enhancing the organization's corporate image. To achieve the study's objectives, the researcher designed a hypothetical framework to explain the nature of the relationship between its variables.

The study proposed several hypotheses, which are temporary solutions that can be proven or refuted, including:

_ There is a significant correlation between digital marketing and the corporate image of the organization.

_ There is a significant effect of digital marketing on the corporate image of the organization.

The study concluded several findings, most notably that there is no significant correlation between digital marketing and the corporate image of the organization, and also no significant effect of digital marketing on the corporate image of the organization. Finally, the study concluded with a number of recommendations that serve as proposed solutions to address the negative results or weaknesses found in the study, the most important of which is the need for Asiacell to give greater attention to digital marketing as a key element in its marketing operations, considering that most of its services provided to customers are purely digital.

Foreign Studies:

- **Study by DJAMANE Mohammed Fayçal (2021):** Article titled "Effects of the Use of Social Media on the Brand Image of Companies." This study aimed to verify how the use of various social media platforms affects consumers' perceptions of the brand image.

  Among the findings of the study were:

  _ Marketing communications significantly affect the brand image of a company. The study also found that the content of a company's brand page on social media positively impacts the company's brand image. This study shows that consumers value the potential of brands through social media.

- Companies are inevitably led to use social media to advertise their brands, promote their products or services, and analyze the market.

- **Study by Sareen Ramzi Hassan et al. (2020):** Titled "The Impact of Tourism Services Quality in Improving Mental Imagery: A Study of Tourism Companies in Erbil, Kurdistan Region of Iraq." This study aimed to determine the impact of tourism service quality on improving mental imagery from the perspective of managers working in tourism companies in Erbil. Additionally, the study sought to understand the concept of tourism service quality and its various dimensions. The study's final results revealed:
  - There is a positive and significant relationship between the dimensions of tourism service quality (safety, empathy, and tangibility) and mental imagery.
  - There is a significant impact of tourism service quality on improving the mental imagery of tourists, contributing to their satisfaction and attracting more tourists.

2. Concept of Social Media:

Numerous researchers and scholars within this domain have articulated various interpretations of social media. The most prominent of these perspectives can be summarized as follows:

- Social media is an electronic service that facilitates communication among individuals within a virtual space, enabling the sharing of files, images, and the creation of blogs (Abdelrahman ben Ibrahim Al-Sha'ar, 2015, p. 18).
- It is described as a category of internet websites that empowers users to actively engage by creating or adding content to pages, managing personal files, and sharing ideas, opinions, and information with others (Khaled Ghassan Youssef Al-Makadadi, 2013, p. 24).
- Social media is also characterized as a social, participatory platform aimed at delivering reliable news, credible information, and verified facts that assist individuals in forming informed opinions regarding events or issues. These platforms reflect the collective mindset, trends, and preferences of the masses (Abdelhakim ben Abdellah ben Rachid Al-Suwafi, 2015, p. 18).

From the aforementioned definitions, it is clear that social media encompasses a variety of websites on the internet that enable millions of individuals to connect with one another. These individuals, often sharing common interests and concerns, can create personal pages, compile lists, display content, and engage in participatory activities. Social media platforms offer privacy, freedom of expression, and the opportunity for individuals to voice their opinions.

2.1. Most Famous Social Media Websites:

Several social media websites have gained immense popularity and widespread usage in recent years. Among the most significant and widely recognized platforms are the following:

2.1.1. Facebook:

Facebook is regarded as one of the leading virtual networking platforms on the internet. The concept for its creation emerged in 2004, initiated by Mark Zuckerberg and his team at Harvard University. Initially, it was designed to be accessible exclusively to Harvard University students; however, it was later expanded to include other universities and select companies (Mimi Mohamed Abdulmonim Tawfik, 2018, p. 23).

Currently, Facebook ranks third in terms of global popularity and web traffic, following Google and Microsoft. The platform boasts over 800 million active users, and its estimated value exceeds 15 billion dollars. Facebook enables individuals to form connections and friendships, share personal information, images, videos, and other media content (Mohamed Al-Mansour, 2012, p. 85).

2.1.2 YouTube:

YouTube is one of the most prominent social media platforms, founded by three former PayPal employees. The beta version of the site was launched in May 2005 in California. YouTube utilizes Adobe Flash technology to display animated clips and offers a diverse range of content, including films, television shows, music videos, and other video material. In 2006, Google acquired YouTube for a reported 165 billion dollars. YouTube is considered a second-generation website, which places it within the realm of Web 2.0 (Asia Brigette, Maryam Balta, 2022, p. 810).

2.1.3 Twitter:

Twitter holds a position of equal importance to Facebook and is considered its primary competitor. The platform was initially created in 2006 when the American company, Obvious, conducted research to develop a micro-blogging service. This service was made publicly available in October of the same year, and Twitter rapidly gained traction as a new and innovative service within the micro-blogging domain.

In 2007, the company separated this micro-service from its parent company, leading to the formation of Twitter, a name derived from the term "Tweet," which refers to a short message. The platform allows users to send brief text messages, known as tweets, which are limited to a maximum of 140 characters. In addition to text messages, users can search for people, topics, and various other subjects, effectively making Twitter a global gathering place for individuals from all over the world (Hanan bent Shashoua Al-Shahri, 2012, p. 32).

2.1.4 LinkedIn:

LinkedIn is a social network tailored specifically for business professionals and companies. It was founded in December 2002 and officially launched on May 5, 2003. The platform is primarily used as a professional networking site, offering a means for companies to recruit potential employees and for individuals to showcase detailed resumes. Employers can search for candidates using keywords, and LinkedIn itself enables verification of the information by cross-referencing past work experiences, further enhancing the credibility of job seekers.

This functionality reduces the reliance on traditional human resource departments for recruitment. By 2012, LinkedIn had amassed over 176 million members spanning more than 200 countries. According to Quantcast, LinkedIn attracted over 42 million visitors from the U.S. alone, and more than 172 million visitors globally on a monthly basis. On June 13, 2016, Microsoft acquired LinkedIn for a deal valued at 26 billion dollars (Ali Khalil Shaqra, 2014, p. 83).

2.1.5. Instagram:

Instagram is a free mobile application designed for photo sharing and serves as a social network. Launched in October 2010, the platform allows users to capture photos, apply digital filters, and share them across a variety of social networking services. Within just two years of its release, Instagram gained more than 20 million users, who uploaded and shared hundreds of millions of photos on their personal accounts. Initially, Instagram was available solely on the iPhone and iPad, but in April 2012, the app was made available for Android users as well.

A significant milestone for Instagram occurred in July 2013, when the platform expanded its offerings to include video sharing, allowing users to upload and share videos alongside their photos. In April 2012, Instagram was acquired by Facebook in a transaction valued at one billion dollars. According to global website rankings, Instagram is currently ranked 57th in terms of web traffic (Mimi Mohamed Abdel Monem Tawfik, 2018, pp. 25-26).

2.2. Social Media Marketing:

The widespread adoption and diversity of the internet have driven companies to invest heavily in online platforms, and one of the central areas that marketers focus on today is social media marketing.

2.2.1 Concept of Social Media Marketing:

The concept of social media marketing varies among researchers, with different perspectives offering unique insights. However, the most widely acknowledged definitions can be summarized as follows:

- Social media marketing is considered a key component of modern marketing, utilizing social media platforms, blogs, and various collaborative online tools for purposes such as marketing, sales, public relations, and customer service (Kashi Khaled, Ziyouh Am Alkhir, 2020, p. 446).
- It refers to the practice in which companies leverage social networks for marketing purposes by identifying and analyzing conversations, engagements, and social interactions within communities, and then utilizing these insights to enhance their strategies (Advantages of Marketing via Social Media Networks, 2018).
- From the above definitions, social media marketing can be described as the strategic use of diverse social media platforms such as Facebook, Twitter, Google Plus, and others in a company's marketing functions. These platforms serve as tools for communication and interaction between the company and its customer base, offering valuable insights into customer behavior and strengthening relationships with consumers.

2.2.2. Advantages of Social Media Marketing:

Social media platforms provide numerous advantages, positioning them as an essential tool for businesses to manage their marketing communications effectively. Some of the most notable advantages include (Nahar Khaled Ben Walid, 2019, p. 564):

- **The Customer Speaks (Expresses Their Opinion):** Modern marketing revolves around the customer, viewing them as the central element in all operations and programs. It emphasizes the importance of involving customers in the strategies and initiatives designed by companies. Social media platforms offer both customers and businesses the opportunity to engage in continuous communication. Customers can freely express their opinions about products and services, which in turn provides companies with a valuable opportunity to listen to feedback, address concerns, and work toward building strong relationships with their clientele to foster long-term loyalty.
- **The Customer Listens (Receives Promotional Messages):** Social media platforms constantly update users on the latest activities happening on their pages, such as receiving daily updates, advertisements, and promotional offers from marketing companies. Even when customers do not engage directly by sharing or commenting, they still act as listeners, passively staying informed about the company's offers, events, and product or service updates. This passive engagement can significantly influence purchasing decisions or shape the customer's perception of the company's brand or reputation in their mind.
- **The Customer Trusts the Company:** One of the core objectives for any company is to establish trust with its customers—ultimately gaining their loyalty and satisfaction. This trust-building strategy is fundamental to social media marketing. It is facilitated through the "source effect" in marketing, a psychological factor that influences consumer behavior. In this context, a customer may be persuaded by a message from source "A" while disregarding the same message from source "B." For instance, when browsing a company's page on platforms like Facebook, Twitter, or others, customers may come across comments and reviews about a product, either positive or negative. Customers are often more inclined to trust peer reviews or opinions shared by others, which can

positively or negatively impact their purchasing decisions. However, they may not place the same level of trust in the company's own claims about its products. This process of trust-building ultimately enhances relationships both between customers and the company and among customers themselves (Sarah Hechour, 2020, pp. 679-680).

2.7.3 Social Media Marketing Strategy:

The concept of a social media marketing strategy can be effectively illustrated through the model proposed by the research office of Forrester International. This model suggests a structured approach to implementing marketing across various social media networks and platforms, referred to as POST. The process is outlined in the diagram below:

Figure 2: Social Media Marketing Strategy

Source:*https://jazzylifesite.wordpress.com/2016/03/05/post-method/*

From the diagram, it is evident that the social media marketing strategy is encapsulated in four key steps, collectively known as POST. This acronym stands for the following components:

- **People**: This refers to the target audience of the company. According to the creators of this model, it is crucial for the company to thoroughly understand their audience by analyzing their profiles, behaviors on social media platforms, activity levels within the network, and the tools they use. It is equally important to comprehend the types of messages or conversations they prefer to engage with. This understanding is vital, as the success of a social media marketing campaign is largely dependent on the nature of the relationships established, rather than solely on the allocated budget.
- **Objectives**: This step involves defining the goals of the marketing plan. These goals could include enhancing the company's reputation, fostering communication with customers, providing better customer service, and achieving customer loyalty. The company must focus on the first point and then adjust the strategy based on the results achieved from the audience's engagement.
- **Strategy**: This step involves determining the destination or goal the company wishes to reach, followed by the development of a plan to achieve this goal. It includes the process of understanding and analyzing the target audience's actions, including their opinions, likes, shares, purchases, and overall product experiences.

- **Technology**: This refers to selecting the most appropriate platform for the company's social media marketing efforts. The platform could be a wiki, Twitter, Facebook, or any other relevant medium.

The French version of this model adds an additional "E" to the acronym POST, which stands for Evaluation. Evaluation is crucial for any strategy, as it involves assessing efforts, establishing performance indicators, and measuring results over time.

3. Corporate Image:

The concept of corporate image has garnered significant attention in marketing as a strategic element due to its influence on customer behavior and purchasing decisions.

3.1. Concept of Corporate Image:

The definition of corporate image varies across different researchers. To gain a comprehensive understanding of this concept, several definitions are presented:

- Ali Ajwa defines corporate image as the cumulative outcome of subjective impressions formed by individuals or groups toward an organization, person, system, or any other entity that impacts human life. These impressions are shaped through both direct and indirect experiences and are tied to individuals' emotions, attitudes, and beliefs (Ali Ajwa, 2003, p. 75).
- Marquis Harold defines corporate image as the total sum of subjective impressions held by the public regarding an organization. These impressions are intangible and vary from one person to another. They are influenced by the organization's products, interactions with the public, community relations, social investments, and its administrative image. Collectively, these individual impressions contribute to forming the overall corporate image of the organization (Coleman Fred, Ali Ajwa, 2005, p. 128).
- Corporate image is also described as a set of features and characteristics perceived by the public, which influence their attitudes and opinions toward a group or organization. These perceptions are formed through personal experiences, whether through direct interactions or other communication processes. The public's perception of the organization's character, functions, objectives, legitimacy, and the human values it embodies ultimately shapes its image (Yazan Al-Nawafla, 2020, p. 13).
- Based on these definitions, corporate image can be understood as a collection of perceptions and impressions individuals form about an entity. These impressions are influenced by various factors and may be either accurate or misleading. Furthermore, corporate image is subjective, varying significantly from one person to another.

3.5. Dimensions of Corporate Image:

Researchers agree that corporate image has four main dimensions, which are:

3.2 Cognitive Component:

This refers to the information related to a subject, issue, or object that forms the cognitive image an individual builds about others and different topics. The accuracy of the information obtained about others affects the accuracy of the corporate image formed about them. The errors formed by individuals about things are mainly caused by the incorrect information and knowledge they have obtained; (Ahmed ben Youssef, 2018, p 249)

3.3. Affective Component:

This refers to the positive or negative tendency toward a subject or object within the framework of the corporate image that individuals form. The affective aspect is formed alongside the cognitive one, and over time, the information and knowledge individuals have formed fades, leaving behind the affective aspects, which represent individuals' attitudes and emotions toward people, issues, and topics, whether positive or negative.

The affective component ranges from positive to negative based on a variety of factors, the most important of which are the available sources of knowledge, the nature of the experience, the method used in the experience, and the degree to which the individual accepts the person from whom the information was received;

3.4. Behavioral Component:

Human behavior reflects the nature of the corporate image formed in various aspects of life. This behavior becomes directed by the image involuntarily, as a result of that image in the subconscious mind. The importance of corporate image in one of its dimensions is that it enables predicting individual behavior, as people's behaviors are logically assumed to be a reflection of the attitudes resulting from the corporate image they have formed about life matters;

3.5. Social Component:

This dimension views the image as acquired through socialization. It shapes behavioral norms toward a company or the world. It is closely related to culture, customs, and traditions. The image is not the result of an individual's creative activity in isolation; rather, it is a product of the group and its activity. It is also not just an individual perceptual activity but a social activity. (Mujahdi Fateh, 2018, p 313)

4. Study Results:

To answer the research problem and verify the hypotheses, i.e., to study the impact of social media on Rue D'or Hotel customers in building and enhancing its corporate image, a descriptive analytical approach was used for the study variables collected through field research. The descriptive approach is defined as a method for precisely describing the subject or phenomenon to be studied, in order to obtain scientific results and interpret them objectively, in line with the actual data of the phenomenon. (Raja Wahid Dawedi, 2000, p 183)

The study was applied to a sample of Rue D'or Hotel customers in Algeria, which is committed to providing quality services such as accommodation, food, and other various services. Due to the impossibility of surveying the entire population because of its size, as well as the company's considerable reservation, and the limited resources of time and effort, a sampling method was used.

To answer the posed problem and achieve the study's objectives, a random sample of 100 Rue D'or Hotel customers was chosen, and a questionnaire was distributed to determine the impact of social media in building and enhancing the corporate image of the organization.

4.1. Description of the Study Variables:

By Gender:

Table No. (01): Distribution of the study sample by gender

Gender	Frequency	Percentage
Male	59	59.0%
Female	41	41.0%
Total	100	100.0%

Source: Prepared by the researcher based on the output of SPSS V.25

From the table and figure above, it is clear that there is a variation in the distribution of the sample according to gender, where the largest percentage of 59% represents males, followed by 41% for females.

By Age:

The following table shows the distribution of the study sample by age:

Table No. (02): Distribution of the study sample by age

Age Range	Frequency	Percentage
18-25	16	16.0%
26-35	40	40.0%
36-45	33	33.0%
Over 45 years	11	11.0%
Total	100	100.0%

Source: Prepared by the researcher based on the output of SPSS V.25

From the table and figure above, we observe that there is a variation in the distribution of the sample according to age, with the largest percentage of 40% belonging to the age group (35-26), followed by 33% for the age group (36-45), then 16% for the age group (18-25), and finally, 11% for those older than 45 years.

By Educational Level:

The following table shows the distribution of the study sample by educational level:

Table No. (03): Distribution of the study sample by educational level

Educational Level	Frequency	Percentage
Intermediate	2	2.0%
Secondary	21	21.0%
University	77	77.0%
Total	100	100.0%

Source: Prepared by the researcher based on the output of SPSS V.25

It is evident from the results of the table and the figure above that 77% of the study sample have a university-level education, while 21% have a secondary-level education, and only 2% have a middle school-level education.

According to professional specialization:

The following table shows the distribution of the study sample based on professional specialization:

Table No. (04): Distribution of the study sample based on professional specialization.

Professional specialization	Frequency	Percentage
Employee	38	38.0%
Businessman	8	8.0%
Other	54	54.0%
Total	100	100.0%

Source: Prepared by the researcher based on the output of SPSS V.25.

From the table and figure above, it is observed that there is variation in the distribution of the sample items based on the professional specialization variable. The largest percentage, 54%, is represented by various professional specializations, followed by 38% representing employees, and then 8% representing businessmen.

According to preferences and tendencies:

The following table shows the distribution of the study sample based on preferences and tendencies.

Table No. (05): Distribution of the study sample based on preferences and tendencies.

Preferences and tendencies	Frequency	Percentage
Sports	17	17.0%
Tourism	21	21.0%
Dining	21	21.0%
Other	41	41.0%
Total	100	100.0%

Source: Prepared by the researcher based on the output of the SPSS V.25 program.

From the table and figure above, it is observed that there is variation in the distribution of the sample items based on the preferences and tendencies variable. The largest percentage, 41%, represents various preferences, followed by 21% for both dining and tourism, and then 17% for sports.

4.2. Presentation of Study Results:

We will now address the responses of the study sample participants regarding the components of the study tool, along with their statistical indicators:

4.2.1 Presentation of Results for the Social Media Component:

Table No. (06): Analysis of the arithmetic averages, standard deviations, and agreement levels for the social media component.

Statements	Strongly Disagree		Disagree		Neutral		Agree		Strongly Agree		Arithmetic Average	Standard Deviation	Response Trend
Statement 1	2	2,0%	7	7,0%	2	2,0%	53	53,0%	36	36,0%	4.14	0.91	High
Statement 2	9	9,0%	12	12,0%	5	5,0%	50	50,0%	24	24,0%	3.68	1.22	High
Statement 3	3	3,0%	1	1,0%	7	7,0%	56	56,0%	33	33,0%	4.15	0.83	High
Statement 4	7	7,0%	29	29,0%	9	9,0%	35	35,0%	20	20,0%	3.32	1.28	Medium
Statement 5	2	2,0%	5	5,0%	7	7,0%	49	49,0%	37	37,0%	4.14	0.90	High
Statement 6	1	1,0%	10	10,0%	9	9,0%	46	46,0%	34	34,0%	4.02	0.96	High
Statement 7	0	0,0%	20	20,0%	12	12,0%	48	48,0%	20	20,0%	3.68	1.01	High
Statement	2	2,0	1	14,0	1	17,	4	43	2	24	3.73	1.04	High

8		%	4	%	7	0 %	3	,0 %	4	,0 %			
Statement 9	2	2,0 %	2	2,0 %	8	8,0 %	50	50 ,0 %	38	38 ,0 %	4.20	0.83	Very High
Statement 10	1	1,0 %	4	4,0 %	8	8,0 %	52	52 ,0 %	35	35 ,0 %	4.16	0.81	High
Statement 11	1	1,0 %	4	4,0 %	3	3,0 %	45	45 ,0 %	47	47 ,0 %	4.33	0.80	Very High
Statement 12	3	3,0 %	10	10,0 %	15	15, 0 %	43	43 ,0 %	29	29 ,0 %	3.85	1.05	High
Statement 13	3	3,0 %	5	5,0 %	3	3,0 %	45	45 ,0 %	44	44 ,0 %	4.22	0.95	Very High
Social Media											0.596	3.97	High

Source: Prepared by the researcher based on the output of the SPSS V.25 program.

From the table above, we observe that:

- Statement 01: "I rely heavily on social media to determine the hotel I want" ranked sixth with a mean of 4.14 and a standard deviation of 0.91, indicating that the sample members strongly agree with relying on social media to determine the hotel they want.
- Statement 02: "I check the hotel's social media through laptops" ranked eleventh with a mean of 3.68 and a standard deviation of 1.22, indicating that the sample members strongly agree with checking the hotel's social media through laptops. This is because laptops are electronic devices that allow communication through social media and are widely used among customers.
- Statement 03: "I check the social media of Rue D'or Hotel through mobile phones" ranked fifth with a mean of 4.15 and a standard deviation of 0.83, indicating that the sample members strongly agree with checking social media through mobile phones, as mobile phones are accessible to everyone and are very widespread.
- Statement 04: "I check the social media of Rue D'or Hotel through iPads" ranked last with a mean of 3.32 and a standard deviation of 1.28, indicating that the sample members moderately agree with checking the hotel's social media through iPads, as the number of people using iPads is very limited.
- Statement 05: "I use social media to get to know the hotel" ranked seventh with a mean of 4.14 and a standard deviation of 0.90, indicating that the sample members strongly agree with using social media to get to know and determine the hotel, as social media is a modern advertising tool.
- Statement 06: "I follow the latest updates from Rue d'or Hotel through its social media platforms (Facebook, YouTube, Instagram, Twitter)" ranked eighth with a mean of 4.02 and a standard deviation of 0.96, indicating that the sample members strongly agree with following the hotel's social media platforms to check the various new offers the hotel provides.
- Statement 07: "I regularly visit the hotel's social media" ranked twelfth with a mean of 3.68 and a standard deviation of 1.01, indicating that the sample members strongly agree with regularly visiting the hotel's social media.

- Statement 08: "My frequent visits to the hotel's social media create a certain fondness for the hotel" ranked tenth with a mean of 3.73 and a standard deviation of 1.04, indicating that the sample members strongly agree with the idea that frequent visits to the hotel's social media create a positive mental image of the hotel.
- Statement 09: "Social media is a main source for checking the latest services offered by the hotel" ranked third with a mean of 4.20 and a standard deviation of 0.83, indicating that the sample members strongly agree that the hotel's social media is a key source for staying updated on the hotel's services, which include audio-visual media.
- Statement 10: "I am interested in the information displayed on the hotel's social media regarding its services" ranked tenth with a mean of 4.16 and a standard deviation of 0.81, indicating that the sample members strongly agree with being interested in the information displayed on social media about the hotel's services, as it often reflects the true image of the hotel.
- Statement 11: "I rely on social media for ease of use and time-saving" ranked first with a mean of 4.33 and a standard deviation of 0.80, indicating that the sample members strongly agree that the hotel relies on information technology that breaks down time and spatial barriers, thus making it highly popular.
- Statement 12: "I interact with people on social media about the hotel's services" ranked ninth with a mean of 3.85 and a standard deviation of 1.05, indicating that the sample members strongly agree with interacting with people on the hotel's social media to benefit from their experiences and learn about their feedback.
- Statement 13: "Social media is a good advertising tool to raise awareness among customers about the hotel's services" ranked second with a mean of 4.22 and a standard deviation of 0.95, indicating that the sample members strongly agree that social media is an effective advertising tool for raising awareness among customers about the hotel's services due to its ease of access and direct credibility without intermediaries.

4.2.2 Presentation of Results for the Mental Image Axis:

Table No. (07): Analysis of means, standard deviations, and agreement levels for the mental image axis.

Statements	Strongly Disagree		Disagree		Neutral		Agree		Strongly Agree		Mean	Standard Deviation	Response Direction
Statement 1	1	1,0 %	3	3,0 %	10	10,0 %	52	52,0 %	34	34,0 %	4.15	0.80	High
Statement 2	3	3,0 %	3	3,0 %	9	9,0 %	48	48,0 %	37	37,0 %	4.13	0.92	High
Statement 3	1	1,0 %	5	5,0 %	10	10,0 %	54	54,0 %	30	30,0 %	4.07	0.83	High
Statement 4	0	0,0 %	8	8,0 %	8	8,0 %	43	43,0 %	41	41,0 %	4.17	0.89	High
Statement 5	0	0,0 %	3	3,0 %	5	5,0 %	52	52,0 %	40	40,0 %	4.29	0.70	Very High
Statement 6	0	0,0 %	10	10,0 %	24	24,0 %	41	41,0 %	25	25,0 %	3.81	0.93	High

Statement 7	2	2,0 %	0	0,0 %	10	10,0 %	50	50,0 %	38	38,0 %	4.22	0.79	Very High
Statement 8	0	0,0 %	0	0,0 %	13	13,0 %	53	53,0 %	34	34,0 %	4.21	0.66	Very High
Statement 9	0	0,0 %	2	2,0 %	12	12,0 %	52	52,0 %	34	34,0 %	4.18	0.72	High
Statement 10	3	3,0 %	8	8,0 %	16	16,0 %	41	41,0 %	32	32,0 %	3.91	1.04	High
Statement 11	0	0,0 %	7	7,0 %	11	11,0 %	50	50,0 %	32	32,0 %	4.07	0.84	High
Statement 12	1	1,0 %	7	7,0 %	12	12,0 %	52	52,0 %	28	28,0 %	3.99	0.88	High
Statement 13	4	4,0 %	15	15,0 %	20	20,0 %	38	38,0 %	23	23,0 %	3.61	1.12	High
Statement 14	2	2,0 %	5	5,0 %	10	10,0 %	49	49,0 %	34	34,0 %	4.08	0.91	High
Statement 15	0	0,0 %	3	3,0 %	10	10,0 %	49	49,0 %	38	38,0 %	4.22	0.75	Very High
Statement 16	1	1,0 %	14	14,0 %	22	22,0 %	39	39,0 %	24	24,0 %	3.71	1.02	High
Statement 17	0	0,0 %	1	1,0 %	12	12,0 %	47	47,0 %	40	40,0 %	4.26	0.71	Very High
Statement 18	2	2,0 %	10	10,0 %	23	23,0 %	37	37,0 %	28	28,0 %	3.79	1.03	High
Statement 19	0	0,0 %	4	4,0 %	20	20,0 %	39	39,0 %	37	37,0 %	4.09	0.85	High
Mental Image											4.05	0.51	High

Source: Prepared by the researcher based on the outputs of SPSS V.25.

From the table above, we notice that:

• The cognitive dimension:

Statement 01: The information and news I receive about the hotel from social media is positive. From the table, it holds the eighth position with a mean of 4.15 and a standard deviation of 0.80. This indicates that the sample strongly agrees that the information they receive about the hotel from social media is positive.

Statement 02: The services and offers provided by the hotel through social media meet my needs. From the table, it holds the ninth position with a mean of 4.13 and a standard deviation of 0.92. This indicates that the sample strongly agrees that the services the hotel provides via social media align with their needs.

Statement 03: I believe that the information provided by the hotel is credible. From the table, it holds the thirteenth position with a mean of 4.07 and a standard deviation of 0.83. This indicates that the sample strongly agrees that the information provided by the hotel is credible.

Statement 04: What I find on the hotel's social media is consistent with the reality when I visit it. It holds the seventh position with a mean of 4.17 and a standard deviation of 0.89. This indicates that the

sample strongly agrees that what customers find on the hotel's social media is consistent with the reality when they visit it.

Statement 05: I find the interaction through the hotel's social media easy and comfortable. It holds the first position with a mean of 4.29 and a standard deviation of 0.70. This indicates that the sample strongly agrees that interacting through the hotel's social media is easy and comfortable.

• The emotional dimension:

Statement 06: The hotel's brand name is attractive and appropriate for the services it offers. It holds the sixteenth position with a mean of 3.81 and a standard deviation of 0.93. This indicates that the sample strongly agrees that the hotel's brand name is attractive and suitable for the services it provides.

Statement 07: I have a positive impression of Rue D'or Hotel. It holds the fourth position with a mean of 4.22 and a standard deviation of 0.75. This indicates that the sample strongly agrees that they have a positive impression of Rue D'or Hotel.

Statement 08: My stay at the hotel left me with a better image of its services compared to its competitors. It holds the fifth position with a mean of 4.21 and a standard deviation of 0.66. This indicates that the sample strongly agrees that the quality of the services offered by the hotel compared to its competitors is superior.

Statement 09: I am very satisfied with the services provided by Rue D'or Hotel. It holds the sixth position with a mean of 4.18 and a standard deviation of 0.72. This indicates that the sample is highly satisfied with the services provided by the hotel.

• The behavioral dimension:

Statement 10: The internal system used by the hotel has positively affected my behavior inside. It holds the fifteenth position with a mean of 3.91 and a standard deviation of 1.04. This indicates that the sample strongly agrees that the internal system used by the hotel has positively influenced their behavior inside.

Statement 11: The way the hotel staff interacts with me has helped me integrate with other guests and employees. It holds the twelfth position with a mean of 4.07 and a standard deviation of 0.84. This indicates that the sample strongly agrees that the way the hotel staff interacts with them has helped them integrate with other guests and employees.

Statement 12: The good principles the hotel follows when interacting with customers have aligned my behavior with theirs. It holds the fourteenth position with a mean of 3.99 and a standard deviation of 0.88. This indicates that the sample strongly agrees that their behavior aligns with the good principles the hotel follows in dealing with customers.

Statement 13: During my stay at the hotel, I changed my behavior. It holds the nineteenth position with a mean of 3.61 and a standard deviation of 1.12. This indicates that the sample strongly agrees that their behavior changed during their stay at the hotel.

Statement 14: The services I found at the hotel made me consider staying there again. It holds the eleventh position with a mean of 4.08 and a standard deviation of 0.91. This indicates that the sample strongly agrees that the quality and type of services offered

• The social dimension:

Statement 15: I try to share my experience with Rue D'or Hotel with my relatives and friends. It holds the third position with a mean of 4.22 and a standard deviation of 0.79. This indicates that the sample strongly agrees that they share their hotel experiences with relatives and friends.

Statement 16: I contribute to the charitable projects provided by Rue D'or Hotel. It holds the eighteenth position with a mean of 3.71 and a standard deviation of 1.02. This indicates that the sample strongly agrees with their contribution to the charitable projects provided by the hotel in the future.

Statement 17: The good treatment by the hotel encourages me to improve its image among people. It holds the second position with a mean of 4.26 and a standard deviation of 0.71. This indicates that the sample strongly agrees that the good treatment they received from the hotel motivates them to enhance the hotel's image among people.

Statement 18: I contribute to awareness campaigns (anti-drug, anti-smoking, etc.) for the benefit of society organized by the hotel. It holds the seventeenth position with a mean of 3.79 and a standard deviation of 1.03. This indicates that the sample strongly agrees with their participation in future awareness campaigns organized by the hotel for the benefit of society.

Statement 19: The hotel contributes to supporting organizations that carry out cultural and sports activities. It holds the thirteenth position with a mean of 3.61 and a standard deviation of 1.12. This indicates that the sample strongly agrees that the hotel contributes to supporting organizations involved in cultural and sports activities.

4.3 Presentation and analysis of the study hypotheses:

4.3.1 Presentation and analysis of the first main hypothesis:

The validity of the hypothesis was tested, which states the following:

• **The null hypothesis H0:** There is no statistically significant positive effect of social media in building and enhancing the institutional image at a significance level of ($0.05 \geq \alpha$);

• **The alternative hypothesis H1**: There is a statistically significant positive effect of social media in building and enhancing the institutional image at a significance level of ($0.05 \geq \alpha$).

To test the first main hypothesis, multiple linear regression analysis was used to detect the correlation between the study variables (social media and the institutional image), and the table below summarizes the results of testing this hypothesis.

Table No. (08): Statistical test results of simple linear regression on the effect of social media on the institutional image.

	Regression Equation		**F Test**		**T Test**		**Correlation Coefficient "R"**	**Determination Coefficient R^2**
	B Coefficients	**Standard Error**	**F Value**	**Significance Level**	**T Value**	**Significance Level**		
Intercept	13.20	4.97	60.59	0.000	2,65	0,000	0,61	0,37
Institutional Image	0.49	0.06			7,78	0,000		

Source: Prepared by the researcher based on the outputs of SPSS V.25 program.

We can observe from Table No. (14) that the value of F reached 60.59, which is statistically significant at the p-value significance level of 0.000. This indicates the effect of social media on the institutional image. Additionally, the value of T was 7.78, which is statistically significant at the significance level of 0.000, meaning that social media is a significant variable affecting the institutional image.

Looking at the value of B, which indicates that a one-unit change in social media corresponds to a 0.49 change in the institutional image. The determination coefficient R^2 is 0.37, meaning that 37% of the changes in the institutional image are caused by changes in social media. Therefore, we accept the hypothesis stating that social media has a positive effect on building and enhancing the institutional image.

4.3.2 Presentation and analysis of the first sub-hypothesis:

The validity of the hypothesis was tested, which states the following:

• **The null hypothesis H0:** There is no statistically significant positive effect of social media in building and enhancing the cognitive dimension of the institution at a significance level of (0.05 ≥ α);
• **The alternative hypothesis H1:** There is a statistically significant positive effect of social media in building and enhancing the cognitive dimension of the institution at a significance level of (0.05 ≥ α).

Table No. (09): Statistical test results of simple linear regression on the effect of social media on the cognitive dimension.

	Regression Equation		F Test		T Test		Correlation Coefficient "R"	Determination Coefficient R^2
	B Coefficients	Standard Error	F Value	Significance Level	T Value	Significance Level		
Intercept	22,17	4,11	52,53	0,000	5,39	0,000	0,59	0,34
Cognitive Dimension	1,41	0,19			7,24	0,000		

Source: Prepared by the researcher based on the outputs of SPSS V.25 program.

We can observe from Table No. (15) that the value of F reached 52.53, which is statistically significant at the significance level of 0.000. This indicates the effect of social media on the cognitive dimension. Additionally, the value of T was 7.24, which is statistically significant at the significance level of 0.000, meaning that social media is a significant variable affecting the cognitive dimension.

Looking at the value of B, which indicates that a one-unit change in social media corresponds to a 1.41 change in the cognitive dimension. The determination coefficient R^2 is 0.34, meaning that 34% of the changes in the cognitive dimension are caused by changes in social media. Therefore, we accept the hypothesis stating that social media has a positive effect on building and enhancing the cognitive dimension of the institution.

4.3.3 Presentation and analysis of the second sub-hypothesis:

The validity of the hypothesis was tested, which states the following:
• **The null hypothesis H0:** There is no statistically significant positive effect of social media in building and enhancing the emotional dimension of the institution at a significance level of (0.05 ≥ α);
• **The alternative hypothesis H1:** There is a statistically significant positive effect of social media in building and enhancing the emotional dimension of the institution at a significance level of (0.05 ≥ α).

Table No. (10): Statistical test results of simple linear regression on the effect of social media on the emotional dimension.

	Regression Equation		F Test		T Test		Correlation Coefficient "R"	Determination Coefficient R^2
	B Coefficients	Standard Error	F Value	Significance Level	T Value	Significance Level		
Intercept	20,02	4,63	47,30	0,000	4,31	0,000	0,57	0,33
Emotional Dimension	1,92	0,28			6,87	0,000		

Source: Prepared by the researcher based on the outputs of SPSS V.25 program.

We can observe from Table No. (16) that the value of F reached 47.30, which is statistically significant at the significance level of 0.000. This indicates the effect of social media on the emotional dimension. Additionally, the value of T was 6.87, which is statistically significant at the significance level of 0.000, meaning that social media is a significant variable affecting the emotional dimension.
Looking at the value of B, which indicates that a one-unit change in social media corresponds to a 1.92 change in the emotional dimension. The determination coefficient R^2 is 0.33, meaning that 33% of the changes in the emotional dimension are caused by changes in social media. Therefore, we accept the hypothesis stating that social media has a positive effect on building and enhancing the emotional dimension of the institution.

4.3.4 Presentation and Analysis of the Third Sub-Hypothesis:
The validity of the hypothesis was tested, which asserts the following:

- **Null Hypothesis (H0):** There is no statistically significant positive effect of social media on building and enhancing the behavioral dimension of the organization at a significance level of ($0.05 \geq \alpha$).
- **Alternative Hypothesis (H1):** There is a statistically significant positive effect of social media on building and enhancing the behavioral dimension of the organization at a significance level of ($0.05 \geq \alpha$).

Table (11): Results of the Simple Linear Regression Statistical Test for the Impact of Social Media on the Behavioral Dimension.

	Regression Equation		F Test		T Test		Correlation Coefficient "R"	Determination Coefficient R^2
	B Coefficients	Standard Error	F Value	Significance Level	T Value	Significance Level		
Intercept	33,53	4,24	18,73	0,000	7,90	0,000	0,40	0,16
Behavioral Dimension	0,92	0,21			4,32	0,000		

Source: Prepared by the researcher based on the outputs of SPSS V.25.
From Table 17, it can be observed that the F value is 18.73, which is statistically significant at a significance level of 0.000. This indicates the presence of an effect of social media on the behavioral dimension. Additionally, the T value is 4.32, which is also statistically significant at a significance level of 0.000. This implies that social media is a significant variable affecting the behavioral dimension.
The B coefficient, which is 0.92, indicates that for every one-unit change in social media, there is a corresponding 0.92-unit change in the behavioral dimension. The R^2 value is 0.16, meaning that 16% of the variation in the behavioral dimension is attributed to changes in social media. Therefore, the hypothesis stating that social media has a positive effect on building and enhancing the behavioral dimension of the organization is accepted.

4.3.5 Presentation and Analysis of the Fourth Sub-Hypothesis:
The validity of the hypothesis was tested, which asserts the following:

- **Null Hypothesis (H0):** There is no statistically significant positive effect of social media on building and enhancing the social dimension of the organization at a significance level of (0.05 ≥ α).
- **Alternative Hypothesis (H1):** There is a statistically significant positive effect of social media on building and enhancing the social dimension of the organization at a significance level of (0.05 ≥ α).

Table (12): Results of the Simple Linear Regression Statistical Test for the Impact of Social Media on the Social Dimension.

	Regression Equation		F Test		T Test		Correlation Coefficient "R"	Determination Coefficient R^2
	B Coefficients	Standard Error	F Value	Significance Level	T Value	Significance Level		
Intercept	32,74	4,35	19,33	0,000	7,52	0,000	0,40	0,16
Social Performance	0,94	0,21			4,39	0,000		

Source: Prepared by the researcher based on the outputs of SPSS V.25.

From Table 18, it can be noted that the F value is 19.33, which is statistically significant at a significance level of 0.000. This indicates the presence of an effect of social media on the social dimension. Furthermore, the T value is 4.39, which is statistically significant at a significance level of 0.000, suggesting that social media is a significant variable affecting the social dimension.

The B coefficient, which is 0.94, indicates that for every one-unit change in social media, there is a corresponding 0.94-unit change in the social dimension. The R^2 value is 0.16, meaning that 16% of the variation in the social dimension can be explained by changes in social media. As a result, the hypothesis stating that social media has a positive effect on building and enhancing the social dimension of the organization is accepted.

5. **Results**:

_ Social media is considered one of the most important approaches relied upon by hotel institutions due to its features, widespread use, and interaction between service providers and customers.

_ Social media is based on five main characteristics: participation, openness, conversation, community, and connectivity.

_ The social media marketing strategy is based on four main steps, summarized in the word POST, which are: People, Objectives, Strategy, and Technology.

_ The dimensions of the institutional image are based on: the cognitive dimension (Cognitive component), the behavioral dimension (Behavioral component), the emotional dimension (Affective component), and the social dimension (Social component).

The results derived from analysing the responses of the sample participants:

_ Social media is considered a primary source for staying updated on new hotel services.

_ The hotel relies on social media due to its ease of use and time-saving benefits.

_ Social media is a good tool for creating customer awareness about the hotel's services.

_ The services provided by the hotel make the customer consider re-experiencing a stay there again.

- The cognitive dimension is the most significant of the institutional image dimensions, which received positive feedback from the participants. Therefore, we can say that the respondents are very satisfied with the positivity and credibility of the information provided by the hotel on social media.
- The hotel institution under study focuses on the emotional dimension as the second most important dimension, based on the degree of customer satisfaction with the services provided by the hotel.
- The institution provides the social dimension as the third most important dimension, reflecting the good treatment of customers by the hotel.
- The hotel institution under study is distinguished by its institutional image, leaving a positive impression on the customers who interact with it, compared to its competitors.

6. **References**

1. Khaled Ghassan Yousef Al-Makdadi. (2013). *The Revolution of Social Networks* (1st edition). Amman: Dar Al-Nafaes for Publishing and Distribution.
2. Raja Wahid Dweidi. (2000). *Scientific Research: Its Theoretical Foundations and Practical Practice*. Beirut, Lebanon: Dar Al-Fikr Al-Muassir for Publishing.
3. Abdelrahman Ben Ibrahim Al-Sha'er. (2015). *Social Media and Human Behavior* (1st edition). Amman: Dar Safaa for Publishing and Distribution.
4. Ali Khalil Shaqra. (2014). *New Media: Social Networks* (1st edition). Amman, Jordan: Dar Osama for Publishing and Distribution.
5. Ali Ajwa. (2003). *Public Relations and Institutional Image*. Cairo, Egypt: Alam Al-Kutub for Publishing and Distribution.
6. Coleman Fride, Ali Ajwa. (2005). *Public Relations Management: Between Strategic Management and Crisis Management*. Cairo, Egypt: Alam Al-Kutub for Publishing and Distribution.
7. Hanan Bent Shashoua Al-Shahri. (2012). *The Impact of Social Networks on Social Relations.* Master's thesis in Sociology. Faculty of Arts and Humanities, Kingdom of Saudi Arabia: King Abdulaziz University.
8. Yazan Al-Nawafla. (January, 2020). *The Role of Public Relations Communication in Shaping the Image Among Pharmacists.* Master's Thesis in Media and Public Relations. Faculty of Media, Amman, Jordan: Middle East University.
9. Abdelhakim Ben Abdellah Ben Rachid Al-Sawafi. (2015). *The Use of Social Media and its Relation to Various Variables.* Master's Thesis in Education and Humanities. Faculty of Science and Arts, Oman: Nizwa University.
10. Mohammed Al-Mansour. (2012). *The Impact of Social Networks on Audience Perception.* Master's Thesis in Media and Communication. Faculty of Arts and Education, Danish Academy in Denmark.
11. Ahmed Ben Youssef. (June 1, 2018). *The Reality of Commitment Among Public Sector Employees in Algeria to Professional Ethics from the Perspective of Public Administration Assistants and Its Impact on the Public Image of Algerian Public Administration: A Case Study of Algerian Customs.Journal of Administration and Development for Research and Studies.*
12. Asia Brigitt, Mariam Balta. (May, 2022). *Managing the Institutional Image of Organizations Through Social Media.Qabas Journal for Human and Social Studies.* University of 20 August 1955.
13. Sarah Heshour. (June 1, 2020). *Social Media Marketing: Between Success Opportunities and Failure Risks.Journal of Humanities Sciences.*

14. Kashi Khaled, Ziyouch Oum Al-Khir. (June 30, 2020). *Opportunities and Challenges of Marketing Through Social Media.Business Management and Economic Studies Journal.*
15. Mujahdi Fateh. (2018). *The Impact of Brand Image Strategy Dimensions on the Perceived Image Among Algerian Consumers.Al-Mee'yar Journal.*
16. Mimi Mohamed Abd Al-Munim Tawfik. (2018). *Social Networks (Origins and Impact).Journal of Education Faculty (Ain Shams University).*
17. Nahar Khaled Ben Al-Walid. (June 2019). *The Role of Marketing Through Social Media in Achieving the Goals of Non-Profit Organizations.Science Horizons Journal (Zayan Ashour University).*
18. *Advantages of Marketing Through Social Media.* (June 18, 2018). Retrieved on March 17, 2023, from Rowad Al-Aamal: https://www.rowadalaamal.com/?p=26944